VENTOLIN INHALER

Salbutamol

QUALITATIVE AND QUANTITATIVE COMPOSITION

VENTOLIN INHALER is a pressurised metered-dose inhaler which delivers 100 micrograms salbutamol (as sulfate) per actuation, into the mouthpiece of a specially designed actuator.

The inhaler contains the CFC-free propellant HFA 134a. Each canister contains 60 or 200 actuations (puffs).

The device may or may not incorporate a dose counter which displays the number of doses remaining in the device.

CLINICAL INFORMATION

Indications

Salbutamol is a selective beta$_2$ adrenoceptor agonist indicated for the treatment or prevention of bronchospasm. It provides short acting (four hours) bronchodilation in reversible airways obstruction due to asthma, chronic bronchitis and emphysema. For patients with asthma salbutamol may be used to relieve symptoms when they occur and to prevent them prior to a known trigger.

Bronchodilators should not be the only or main treatment in patients with persistent asthma. In patients with persistent asthma unresponsive to *VENTOLIN INHALER*, treatment with inhaled corticosteroids is recommended to achieve and maintain control. Failing to respond to treatment with *VENTOLIN INHALER* may signal a need for urgent medical advice or treatment.

Dosage and Administration

Pharmaceutical form: Pressurised inhalation, suspension.

VENTOLIN INHALER is administered by the oral inhaled route only, to be breathed in through the mouth.

Increasing use of beta$_2$ agonists may be a sign of worsening asthma. Under these conditions a reassessment of the patient's therapy plan may be required and concomitant corticosteroid therapy should be considered. (*See Warnings and precautions*)

As there may be adverse effects associated with excessive dosing, the dosage or frequency of administration should only be increased on medical advice.

VENTOLIN INHALER has a duration of action of 4 to 6 hours in most patients.

In patients who find co-ordination of a pressurised metered-dose inhaler difficult a spacer may be used with *VENTOLIN INHALER*.

Babies and young children using the VENTOLIN *INHALER* may benefit from the use of a paediatric spacer device with a face mask (for example the BABYHALER™). (Recommended statement "for example the BABYHALER™" is for use only in those markets where the Babyhaler spacer device is available). (*see Clinical Studies*).

RELIEF OF ACUTE BRONCHOSPASM

- **Adults**

100 or 200 micrograms.

- **Children**

100 micrograms. The dose may be increased to 200 micrograms if required.

On demand use of *VENTOLIN INHALER* should not exceed four times daily. Reliance on such supplementary use or a sudden increase in dose indicates deteriorating asthma (*see Warnings and Precautions*).

PREVENTION OF ALLERGEN OR EXERCISE-INDUCED BRONCHOSPASM

- **Adults**

200 micrograms before challenge or exertion.

- **Children**

100 micrograms before challenge or exertion. The dose may be increased to 200 micrograms if required.

CHRONIC THERAPY

- **Adults**

Up to 200 micrograms 4 times daily.

- **Children**

Up to 200 micrograms 4 times daily.

Contraindications

VENTOLIN INHALER is contraindicated in patients with a history of hypersensitivity to any of its components.

Non-i.v. formulations of *VENTOLIN INHALER* must not be used to arrest uncomplicated premature labour or threatened abortion.

Warnings and Precautions

The management of asthma should normally follow a stepwise programme, and patient response should be monitored clinically and by lung function tests.

Increasing use of short-acting bronchodilators, in particular $beta_2$ agonists to relieve symptoms indicates deterioration of asthma control. Under these conditions, the patient's therapy plan should be reassessed by a physician.

Patients who are taking *VENTOLIN INHALER* more than twice a week on an “as needed” basis, not counting prophylactic use prior to a known trigger may be at risk for overuse of *VENTOLIN INHALER*. A reassessment of the patient's therapy plan may be required.

Sudden and progressive deterioration in asthma control is potentially life-threatening and consideration should be given to starting or increasing corticosteroid therapy. In patients considered at risk, daily peak flow monitoring may be instituted.

Patients who are prescribed regular asthma anti-inflammatory therapy (e.g., inhaled corticosteroids) should be advised to continue taking their anti-inflammatory medication even when symptoms improve, and they no longer require *VENTOLIN INHALER*.

VENTOLIN INHALER should be administered cautiously to patients with thyrotoxicosis.

Potentially serious hypokalaemia may result from $beta_2$ agonist therapy mainly from parenteral and nebulised administration.

Particular caution is advised in acute severe asthma as this effect may be potentiated by concomitant treatment with xanthine derivatives, steroids, diuretics and by hypoxia. It is recommended that serum potassium levels are monitored in such situations.

As with other inhalation therapy, paradoxical bronchospasm may occur, resulting in an immediate increase in wheezing after dosing. This should be treated immediately with an alternative presentation or a different fast-acting inhaled bronchodilator, if immediately available. *VENTOLIN INHALER* should be discontinued, and if necessary a different fast-acting bronchodilator instituted for ongoing use.

In the event of a previously effective dose of inhaled *VENTOLIN INHALER* now failing to give relief for a duration of three hours following administration, the patient should be advised to promptly seek medical advice in order that any necessary additional steps may be taken.

Failing to respond to treatment with salbutamol may signal a need for urgent medical advice or treatment.

The patients' inhaler technique should be checked to make sure that aerosol actuation is synchronised with inspiration of breath for optimum delivery of the drug to the lungs.

For inhaler without dose counter

The inhaler contains enough salbutamol for 200 actuations (puffs) only. After 200 actuations (puffs), the inhaler can continue to spray but without the prescribed dose of salbutamol. Methods such as shaking, weighing or submerging inhalers are not accurate for determining that an inhaler is empty of the prescribed dose of salbutamol.

Maintaining a record of the number of actuations (puffs) administered to the patient should be considered, towards avoiding inadvertent use of an empty inhaler. Keeping a back-up inhaler could be considered. If the patient has more than one inhaler, it is recommended to keep track of each inhaler separately (*see Use and Handling*).

For inhaler with dose counter

When the dose counter reads zero (000) the patient must always replace the inhaler as any actuations (puffs) left in the device are not enough to give the patient the prescribed dose. Patients should plan in advance for replacements (such as contact the healthcare professional) when the dose counter reading approaches zero. Keeping a back-up inhaler could be considered (*see Use and Handling).*

Interactions

VENTOLIN INHALER and non-selective beta-blocking drugs, such as propranolol, should not usually be prescribed together.

VENTOLIN INHALER is not contraindicated in patients under treatment with monoamine oxidase inhibitors (MAOIs).

Pregnancy and Lactation

Fertility

There is no information on the effects of salbutamol on human fertility. There were no adverse effects on fertility in animals (*see* *Non-Clinical Information*).

Pregnancy

Administration of drugs during pregnancy should only be considered if the expected benefit to the mother is greater than any possible risk to the foetus.

During worldwide marketing experience, rare cases of various congenital anomalies, including cleft palate and limb defects have been reported in the offspring of patients being treated with *VENTOLIN INHALER*. Some of the mothers were taking multiple medications during their pregnancies. As no consistent pattern of defects can be discerned, and baseline rate for congenital anomalies is 2 to 3%, a relationship with salbutamol use cannot be established.

Lactation

As salbutamol is probably secreted in breast milk, its use in nursing mothers is not recommended unless the expected benefits outweigh any potential risk. It is not known whether salbutamol in breast milk has a harmful effect on the neonate.

Effects on Ability to Drive and Use Machines

None reported.

Adverse Reactions

Adverse events are listed below by system organ class and frequency. Frequencies are defined as: very common (≥1/10), common (≥1/100 to <1/10), uncommon (≥1/1000 to <1/100), rare (≥1/10,000 to <1/1000) and very rare (<1/10,000) including isolated reports. Very common and common events were generally determined from clinical trial data. Rare and very rare events were generally determined from spontaneous data.

Immune system disorders

Very rare:	Hypersensitivity reactions including angioedema, urticaria, bronchospasm, hypotension and collapse

Metabolism and nutrition disorders

Rare:	Hypokalaemia

Potentially serious hypokalaemia may result from beta$_2$ agonist therapy.

Nervous system disorders

Common:	Tremor, headache
Very rare:	Hyperactivity

Cardiac disorders

Common:	Tachycardia
Uncommon:	Palpitations
Very rare:	Cardiac arrhythmias including atrial fibrillation, supraventricular tachycardia and extrasystoles

Vascular disorders

Rare:	Peripheral vasodilatation

Respiratory, thoracic and mediastinal disorders

Very rare: Paradoxical bronchospasm

Gastrointestinal disorders

Uncommon: Mouth and throat irritation

Musculoskeletal and connective tissue disorders

Uncommon: Muscle cramps

Overdose

The most common signs and symptoms of overdose with *VENTOLIN INHALER* are transient beta agonist pharmacologically mediated events (*see Warnings and Precautions and Adverse Reactions*).

Hypokalaemia may occur following overdosage with *VENTOLIN INHALER*. Serum potassium levels should be monitored.

Lactic acidosis has been reported in association with high therapeutic doses as well as overdoses of short-acting beta-agonist therapy, therefore monitoring for elevated serum lactate and consequent metabolic acidosis (particularly if there is persistence or worsening of tachypnea despite resolution of other signs of bronchospasm such as wheezing) may be indicated in the setting of overdose.

PHARMACOLOGICAL PROPERTIES

Pharmacodynamics

ATC Code

R03AC02

Mechanism of action

Salbutamol is a selective beta-$_2$ adrenoceptor agonist. At therapeutic doses it acts on the beta-$_2$ adrenoceptors of bronchial muscle.

Pharmacodynamic effects

Salbutamol is a selective beta$_2$-adrenoceptor agonist. At therapeutic doses it acts on the beta$_2$-adrenoceptors of bronchial muscle providing short acting (4 to 6 hour) bronchodilation with a fast onset (within 5 minutes) in reversible airways obstruction.

Pharmacokinetics

Absorption

After administration by the inhaled route, between 10 and 20% of the dose reaches the lower airways. The remainder is retained in the delivery system or is deposited in the oropharynx from where it is swallowed. The fraction deposited in the airways is absorbed into the pulmonary tissues and circulation but is not metabolised by the lung.

Distribution

Salbutamol is bound to plasma proteins to the extent of 10%.

Metabolism

On reaching the systemic circulation, salbutamol becomes accessible to hepatic metabolism and is excreted, primarily in the urine, as unchanged drug and as the phenolic sulfate.

The swallowed portion of an inhaled dose is absorbed from the gastrointestinal tract and undergoes considerable first-pass metabolism to the phenolic sulfate. Both unchanged drug and conjugate are excreted primarily in the urine.

Elimination

Salbutamol administered intravenously has a half-life of four to six hours and is cleared partly renally and partly by metabolism to the inactive 4'-O-sulfate (phenolic sulfate) which is also excreted primarily in the urine. The faeces are a minor route of excretion. The majority of a dose of salbutamol given intravenously, orally or by inhalation is excreted within 72 hours.

Clinical Studies

Special Patient Populations

Children < 4 years of age

Paediatric clinical studies conducted at the recommended dose (SB020001, SB030001, SB030002), in patients < 4 years with bronchospasm associated with reversible obstructive airways disease, show that the Evohaler has a safety profile comparable to that in children ≥ 4 years, adolescents and adults.

Non-Clinical Information

In common with other potent selective $beta_2$ receptor agonists, salbutamol has been shown to be teratogenic in mice when given subcutaneously. In a reproductive study, 9.3% of foetuses were found to have cleft palate, at 2.5 mg/kg, four times the maximum human oral dose. In rats, treatment at the levels of 0.5, 2.32, 10.75 and 50mg/kg/day orally throughout pregnancy resulted in no significant foetal abnormalities. The only toxic effect was an increase in neonatal mortality at the highest dose level as the result of

lack of maternal care. A reproductive study in rabbits revealed cranial malformations in 37% of foetuses at 50mg/kg/day, 78 times the maximum human oral dose.

In an oral fertility and general reproductive performance study in rats at doses of 2 and 50 mg/kg/day, with the exception of a reduction in number of weanlings surviving to day 21 post partum at 50 mg/kg/day, there were no adverse effects on fertility, embryofetal development, litter size, birth weight or growth rate.

HFA 134a has been shown to be non-toxic at very high vapour concentrations, far in excess of those likely to be experienced by patients, in a wide range of animal species exposed daily for periods of two years.

PHARMACEUTICAL INFORMATION

List of Excipients

1,1,1,2-tetrafluoroethane (also known as HFA 134a or norflurane).

Shelf Life

The expiry date is indicated on the packaging.

Storage

The storage conditions are detailed on the packaging.

Replace the mouthpiece cover firmly and snap it into position

Protect from frost and direct sunlight.

As with most inhaled medications in aerosol canisters, the therapeutic effect of this medication may decrease when the canister is cold.

Pressurised container. Do not expose to temperatures higher than 50C. The canister should not be broken, punctured or burnt, even when apparently empty.

Nature and Contents of Container

VENTOLIN INHALER comprises a suspension of salbutamol sulfate in the propellant HFA 134a. The suspension is contained in an aluminium alloy can, sealed with a metering valve. Each canister is fitted with a plastic actuator incorporating an atomising nozzle and fitted with a dustcap. *VENTOLIN INHALER* delivers 100 micrograms of salbutamol (as sulfate) per actuation.

Each canister contains 60 or 200 actuations.

Inhaler may or may not have a dose counter.

Inhaler with dose counter:

The canister has a counter attached to it, which shows how many actuations of medicine are left. The number is visible through a window in the back of the plastic actuator.

Incompatibilities

None reported.

Use and Handling

Inhaler without dose counter:

Instructions for use of your salbutamol Inhaler without dose counter

The inhaler does not have a dose counter. The inhaler contains enough salbutamol for 200 actuations (puffs) only. After 200 actuations (puffs), the inhaler can continue to spray but without the prescribed dose of salbutamol. Maintaining a record of the number of actuations (puffs) administered to the patient should be considered, towards avoiding inadvertent use of an empty inhaler. Keeping a back-up inhaler could be considered. If the patient has more than one inhaler, it is recommended to keep track of each inhaler separately.

Testing your inhaler

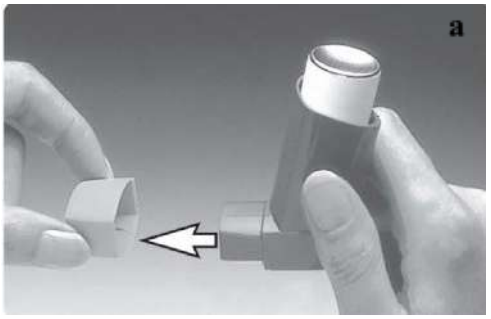

- Before using for the first time, test that it is working.
- Remove the mouthpiece cover by gently squeezing the sides of the cover (**picture a)**,
- To make sure it works for the first time, shake it well, point the mouthpiece away from you and press the canister to release two puffs into the air.
- If it has not been used for 5 days or more shake it well and release 2 puffs into the air to make sure that it works.

Using your inhaler

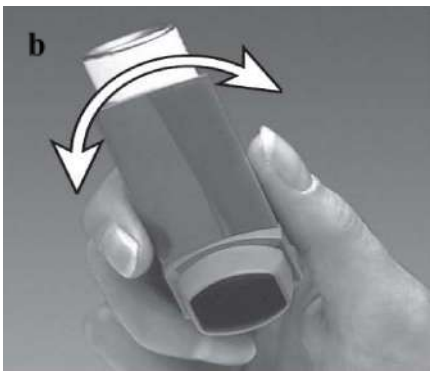

1. Remove the mouthpiece cover by gently squeezing the sides of the cover (**picture a**).
2. Check inside and outside of the inhaler including the mouthpiece for the presence of loose objects.
3. Shake the inhaler well to ensure that any loose objects are removed and that the contents of the inhaler are evenly mixed **(picture b)**.



4. Hold the inhaler upright between fingers and thumb with your thumb on the base, below the mouthpiece (**picture c**).

5. Breathe out as far as is comfortable and then place the mouthpiece in your mouth between your teeth and close your lips around it but do not bite it (**picture d**).

6. Just after starting to breathe in through your mouth press down on the top of the inhaler to release *VENTOLIN* while still breathing in steadily and deeply (**picture e**).

d



7. While holding your breath, take the inhaler from your mouth and take your finger from the top of the inhaler. Continue holding your breath for as long as is comfortable (**picture f**).

8. If you are to take further puffs keep the inhaler upright and wait about half a minute before repeating steps three to seven.

9. Replace the mouthpiece cover by firmly pushing and snapping the cap into position.

e



f



IMPORTANT

Do not rush Stages 5, 6 and 7. It is important that you start to breathe in as slowly as possible just before operating your Inhaler.

Practise in front of a mirror for the first few times. If you see 'mist' coming from the top of the inhaler or the sides of your mouth you should start again from stage two.

If your doctor has given you different instructions for using your inhaler, please follow them carefully. Tell your doctor if you have any difficulties.

CLEANING

To stop your inhaler blocking, your inhaler should be cleaned at least once a week. To clean your inhaler:

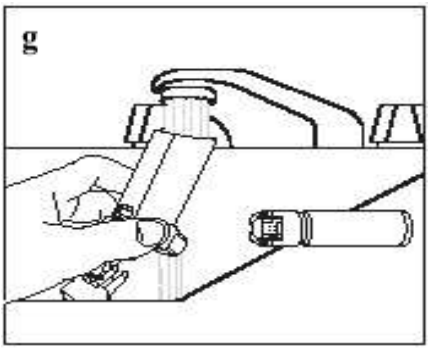

1.Remove the metal canister from the plastic casing of the inhaler and remove the mouthpiece cover.

2. Rinse the plastic casing thoroughly under warm running water (**picture g**) and then wash the plastic casing again through the mouthpiece (**picture h**).

3. Dry the plastic casing thoroughly inside and out (such as overnight) (**picture i)**.

4. Replace the metal canister and mouthpiece cover.

DO NOT PUT THE METAL CANISTER INTO WATER.

Not all presentations are available in every country.

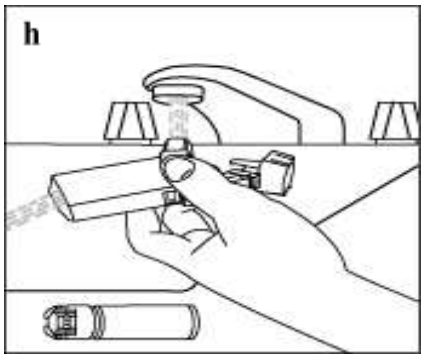

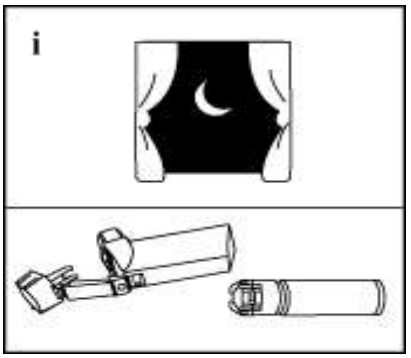

Instructions for use of your salbutamol Inhaler with dose counter

When the dose counter reads zero (000) the patient must always replace the inhaler as any actuations (puffs) left in the device are not enough to give the patient the prescribed dose. Patients should plan in advance for replacements (such as contact the healthcare professional) when the dose counter reading approaches zero. Keeping a back-up inhaler could be considered.

Testing your inhaler

Before using for the first time, remove the mouthpiece cover by gently squeezing the sides of the cover, shake the inhaler well, and release four puffs into the air until the dose counter reads 200 to make sure that it works. If it has not been used for 5 days or more, or, if you drop the inhaler, shake it well and release 2 puffs into the air to make sure that it works. Each time the inhaler is activated, the number on the dose counter will count down by one.

In certain circumstances dropping the inhaler may cause the dose counter to count on.

Using your inhaler

1.Remove the mouthpiece cover by gently squeezing the sides of the cover.

2. Check inside and outside of the inhaler including the mouthpiece for the presence of loose objects

3. Shake the inhaler well to ensure that any loose objects are removed and that the contents of the inhaler are evenly mixed.

4. Hold the inhaler upright between fingers and thumb with your thumb on the base, below the mouthpiece.

5. Breathe out as far as is comfortable and then place the mouthpiece in your mouth between your teeth and close your lips around it but do not bite it.

6. Just after starting to breathe in through your mouth press down on top of the inhaler to release salbutamol while still breathing in steadily and deeply.

7. While holding your breath, take the inhaler from your mouth and take your finger from the top of the inhaler. Continue holding your breath for as long as is comfortable.

8. If you are to take further puffs, keep the inhaler upright and wait about half a minute before repeating stages 3 to 7.

9. Replace the mouthpiece cover by firmly pushing and snapping the cap into position.

IMPORTANT

Do not rush Stages 5, 6 and 7. It is important that you start to breathe in as slowly as possible just before operating your inhaler.

Practise in front of a mirror for the first few times. If you see 'mist' coming from the top of the inhaler or the sides of your mouth you should start again from stage 2.

If your doctor has given you different instructions for using your inhaler, please follow them carefully. Tell your doctor if you have any difficulties.

When the dose counter reads zero (000) the patient must always replace the inhaler as any actuations (puffs) left in the device are not enough to give the patient the prescribed dose. Patients should plan in advance for replacements (such as contact the healthcare professional) when the dose counter reading approaches zero. Keeping a back-up inhaler could be considered.

Never try to alter the numbers on the dose counter or detach the counter from the metal canister. The dose counter cannot be reset and is permanently attached to the canister.

CLEANING

Your inhaler should be cleaned at least once a week.

1. Remove the metal canister and the attached dose counter from the plastic casing of the inhaler and remove the mouthpiece cover.

2. Rinse the actuator thoroughly under warm running water.

3. Dry the actuator THOROUGHLY inside and out.

4. Replace the metal canister and mouthpiece cover.

DO NOT PUT THE METAL CANISTER INTO WATER.

Version number: GDS31/IPI12

Date of issue: 20 December 2024

Manufactured by:
Glaxo Wellcome Production
Zone Industrielle No. 2
23, rue Lavoisier
27000 Evreux
France

Manufactured for:
Fensyl MHP Consulting Limited
49 Kofo Abayomi Avenue, Apapa, Lagos, Nigeria

Trademarks are owned by or licensed to the GSK group of companies.
©2025 GSK group of companies or its licensor